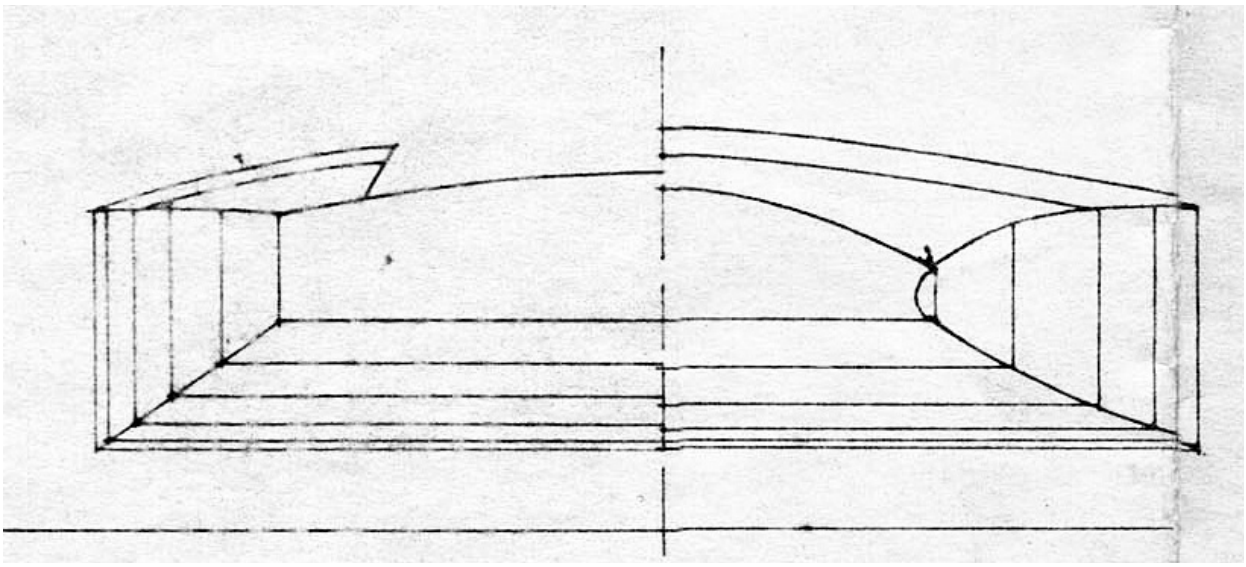

Len Morris designed his first 11' scow Olive in 1928 in South Australia, about the same time Joel Van Sant designed his 11' singlehander on the East Coast of the U.S. Both these classes would develop separately under the same name, the Moth class. It would take another 40 years before the Australian Moths would join the International Moths under a combined rule (which took most of the Australian rig rules).

Len Morris would design the Mk II scow in 1946 as a follow on to his first design and it became extremely popular in the 1950's with over 500 built in Australia and more in New Zealand (where it formed the basis for the one-design New Zealand Moth class). For the Mk II scow, Len would borrow the frame and girder construction from the wooden airplane engineers, probably the first one to apply this method of construction to boat building.

I've chunked the Mk II plans into a more friendly PDF format which might make it harder to follow compared to a nice big blueprint. There are no building instructions so some of the details would have to be sussed out as you go along. As far as a rig, a Classic Moth rig would work with this hull or you could stick with the rig Len Morris designed which is of higher aspect (17' luff vs. 15' luff for the Classic Moth).

Some people view the scows as boxy and ugly. Some find them beautiful and they sail well and plane extremely easy. I find them beautiful and this design would make a good home build project. Rod Mincher

MARK II.

DESIGNER. L.W. MORRIS
DATE. JULY 1946. REDRAWN APRIL 1953

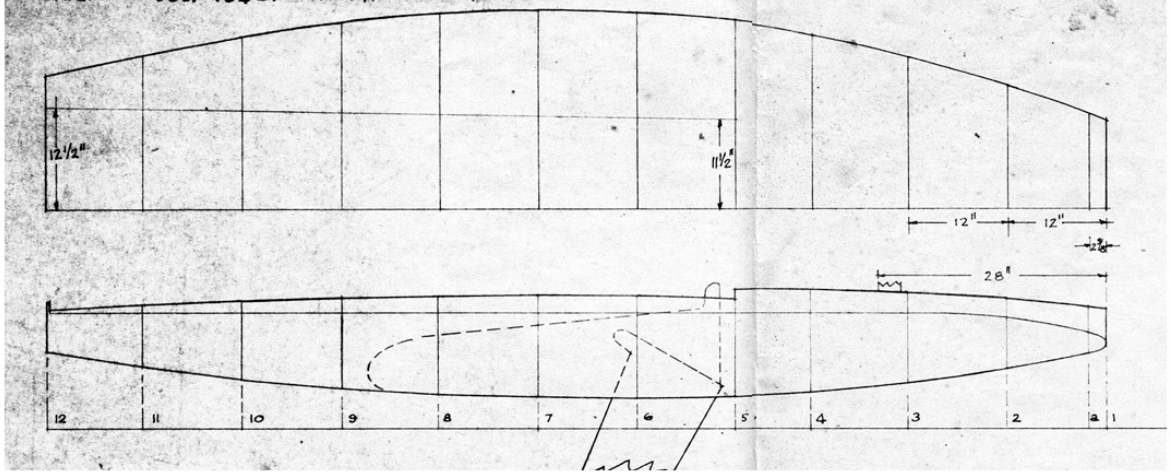

OFFSETS.

STATION	1.	a	2	3	4	5	6	7	8	9	10	11	12		
	0-11-1+	1-0-0+	1-3-3+	1-7-0	1-9-5	1-11-3	20-3	2-0-5	2-0-2	1-11-2	1-9-4+	1-7-2	1-4-5		HALF BREADTHS.
CHINE		0-9-3	0-7-3	0-5-6	0-4-5+	0-4-0	03-5+	0-3-5+	0-4-0+	0-4-6+	0-6-0	0-7-4	0-9-3		
SHEER		0-11-6	1-1-6	1-2-3	1-2-3	1-2-3	12-3	1-2-3	1-2-3	1-2-3	1-2-3	1-2-3	1-2-3		HEIGHTS

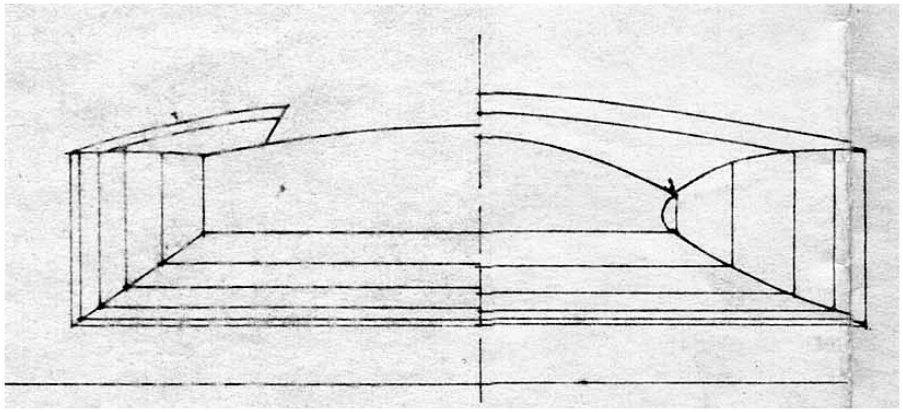

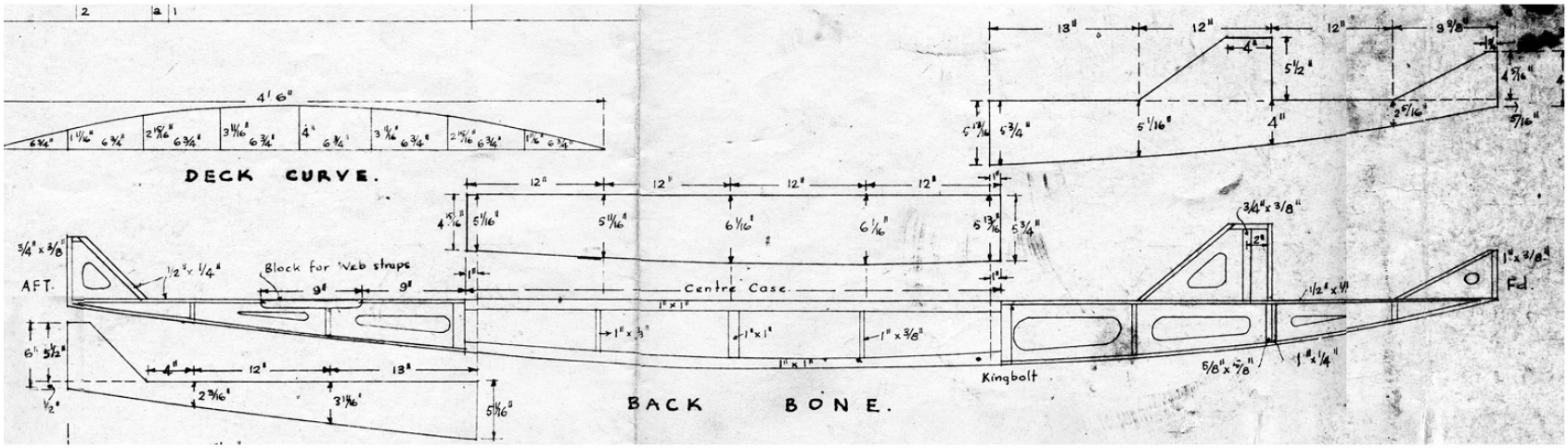
4' 6"
DECK CURVE.
AFT.
Fd.
Block for Web straps
Centre Case.
Kingbolt
BACK BONE.

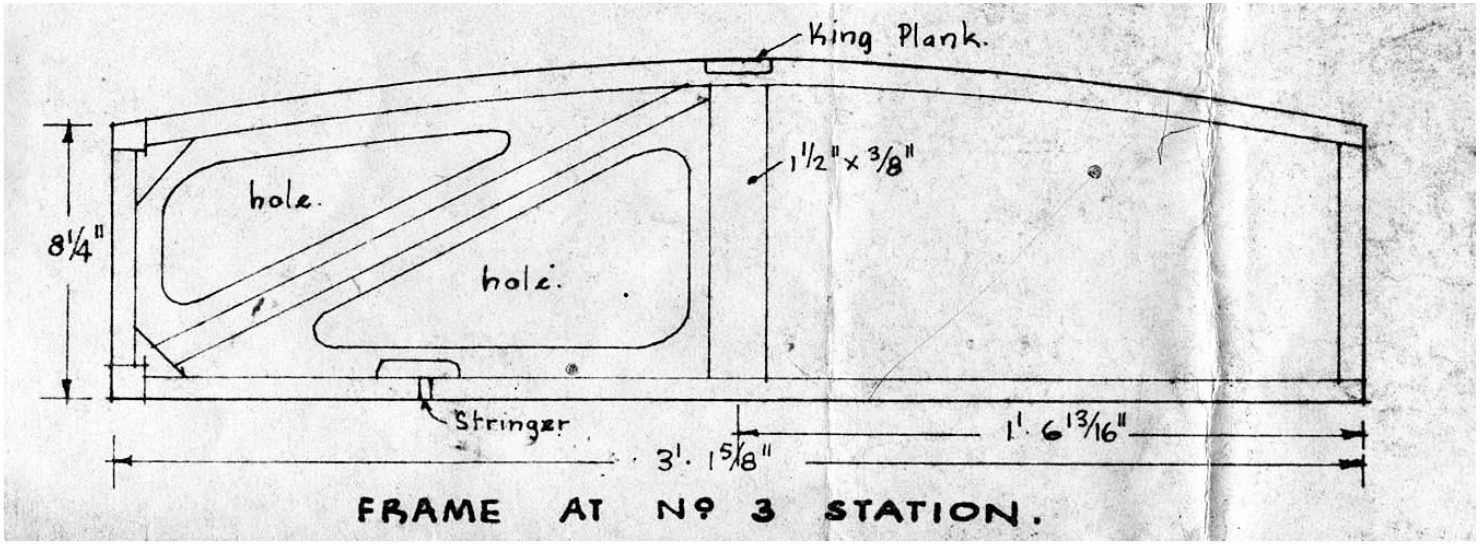

FRAME AT No 3 STATION.

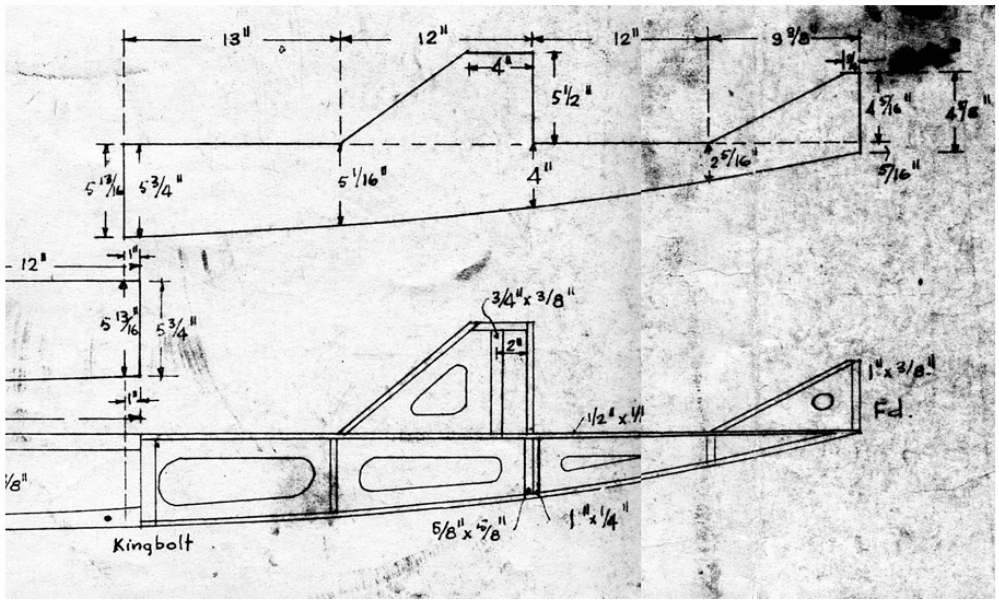

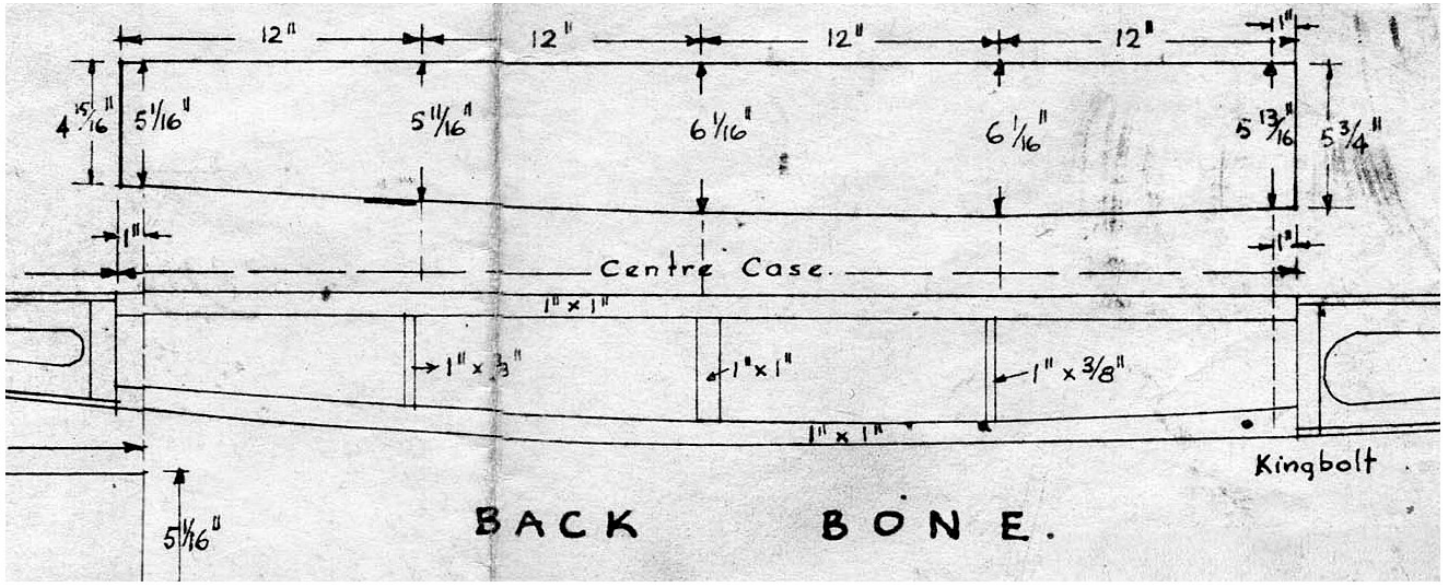
12"
12"
12"
12"
1"
4 15/16"
5 1/16"
5 11/16"
6 1/16"
6 1/16"
5 13/16"
5 3/4"
1"
1"
Centre Case.
1" x 1"
1" x 3/8"
1" x 1"
1" x 3/8"
1" x 1"
Kingbolt
5 1/16"
BACK BONE.

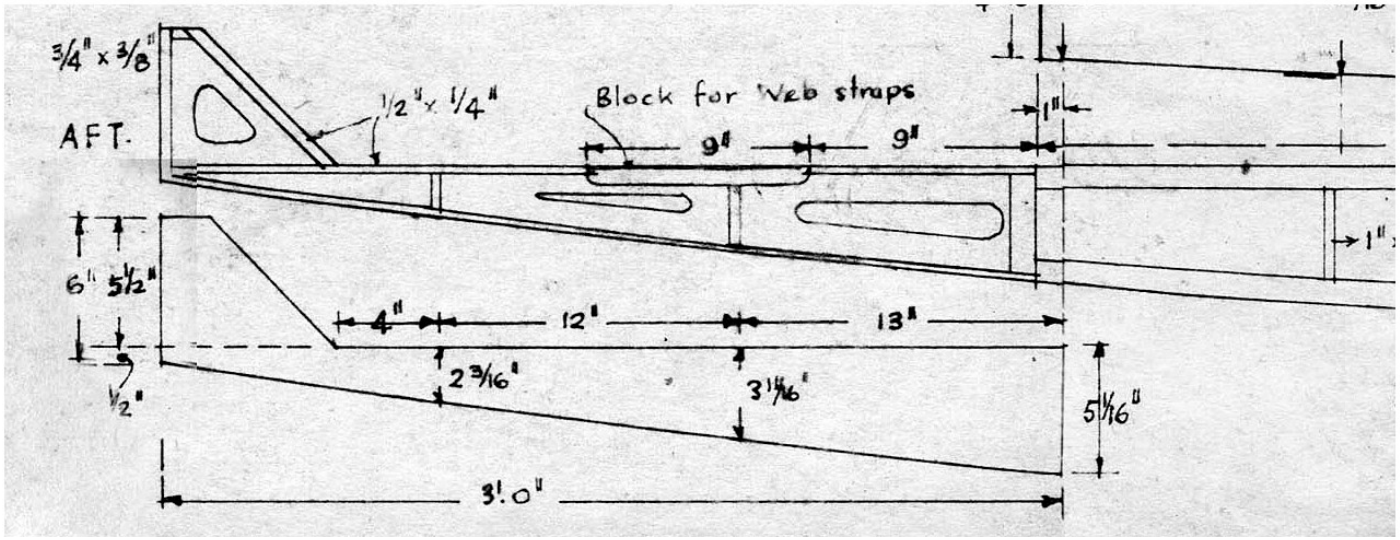
3/4" x 3/8"
AFT.
1/2" x 1/4"
Block for Web straps
9"
9"
1"
1"
6"
5 1/2"
1/2"
4"
12"
13"
2 3/16"
3 11/16"
5 1/16"
3'. 0"

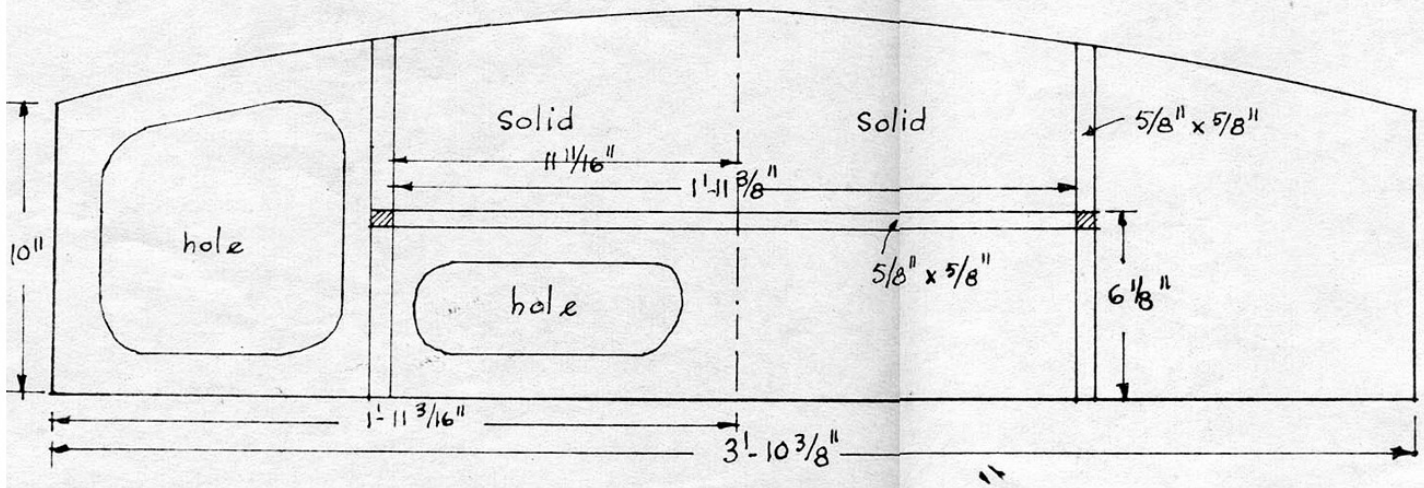

FRAME AT NO. 5 TO FACE AFT.

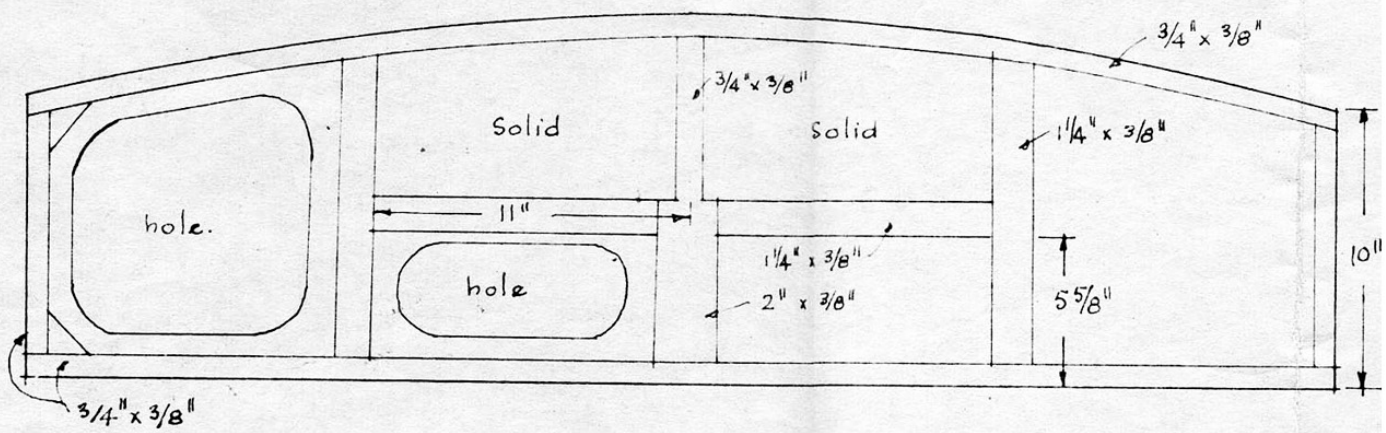

FRAME AT No. 5 TO FACE FORWARD.

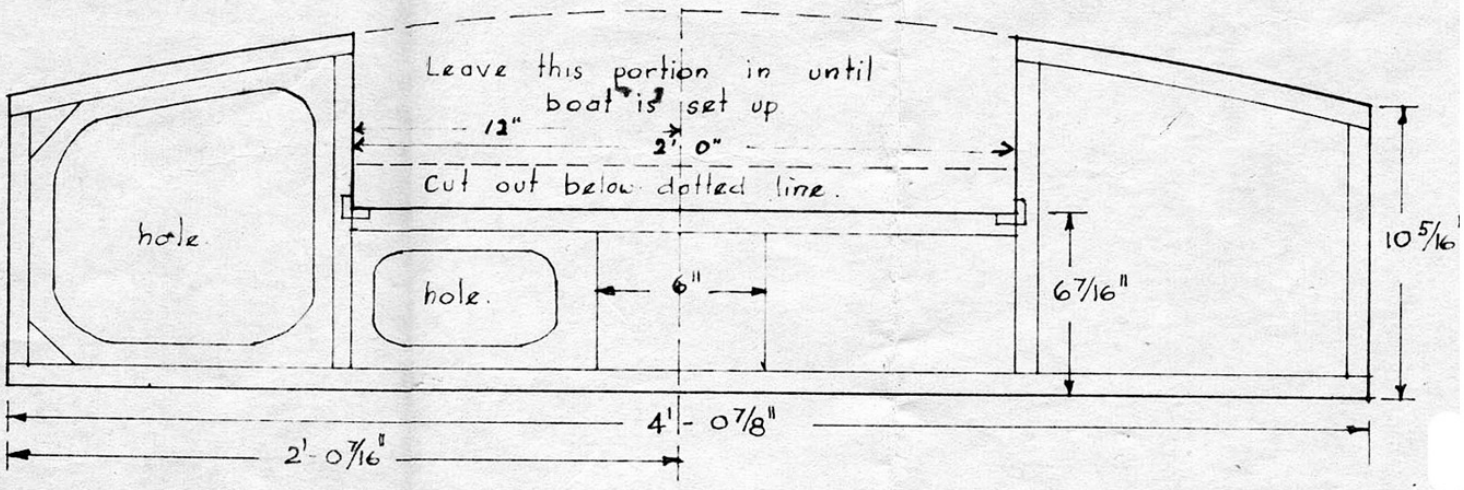

FRAME AT Nº 7.

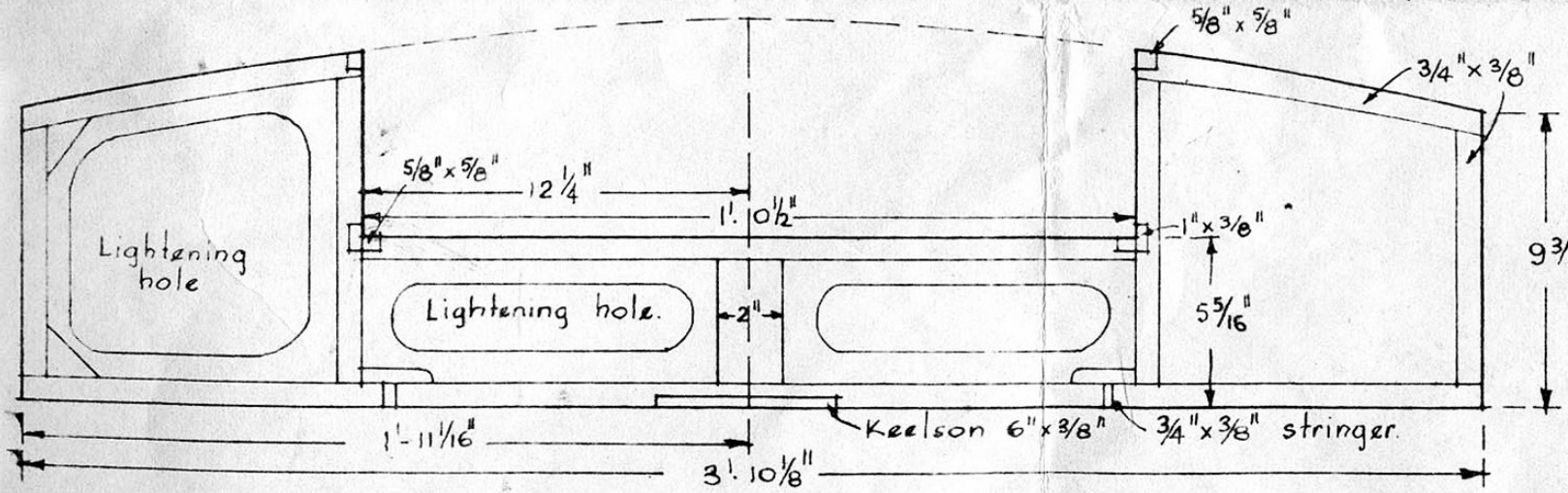

FRAME AT Nº 9 STATION

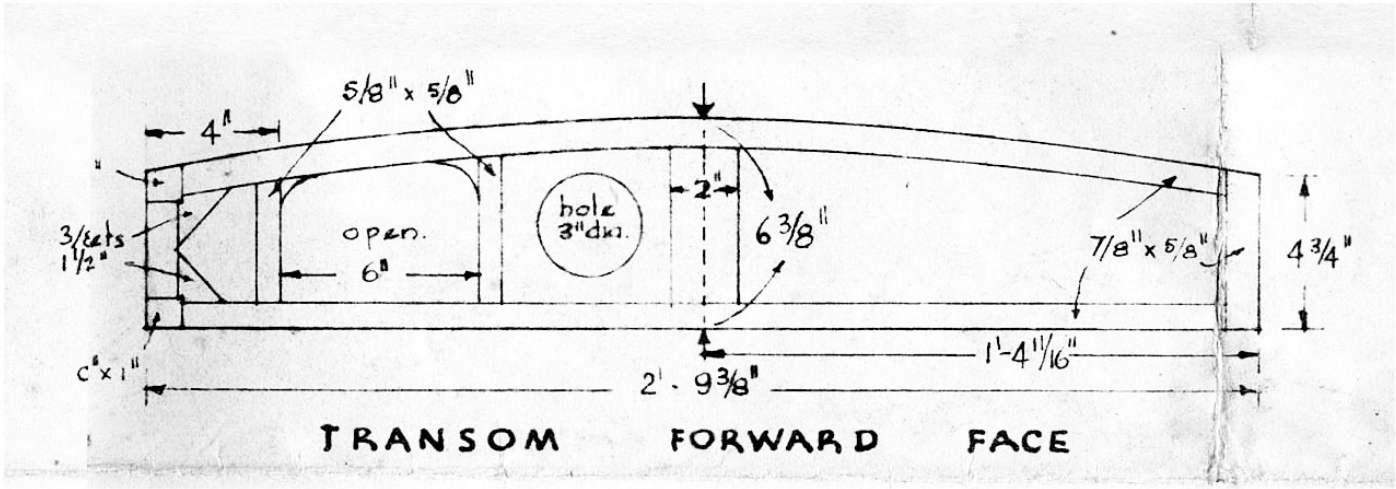

TRANSOM FORWARD FACE

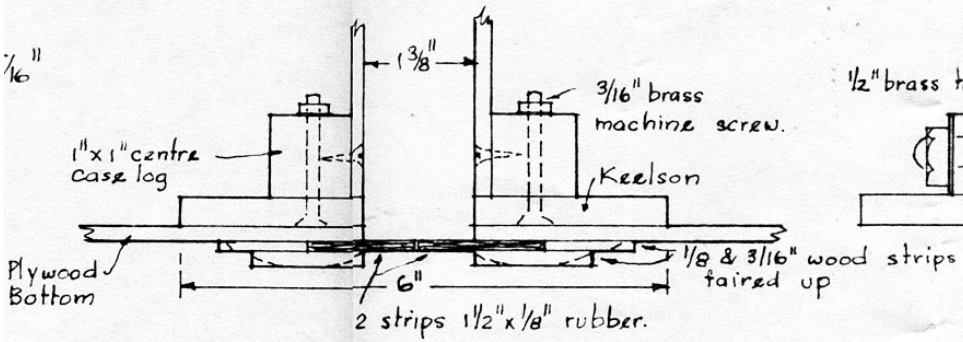

CENTRE CASE ASSEMBLY.

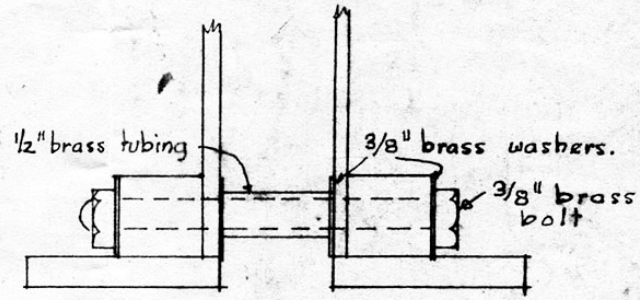

KING BOLT.

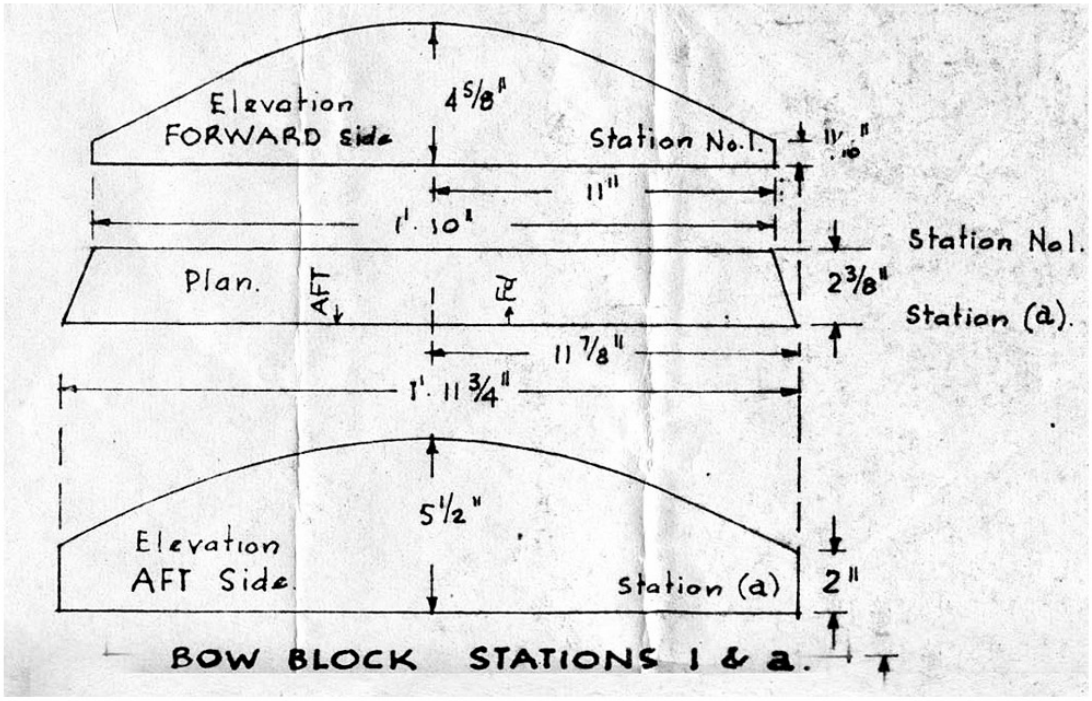

BOW BLOCK STATIONS 1 & a.

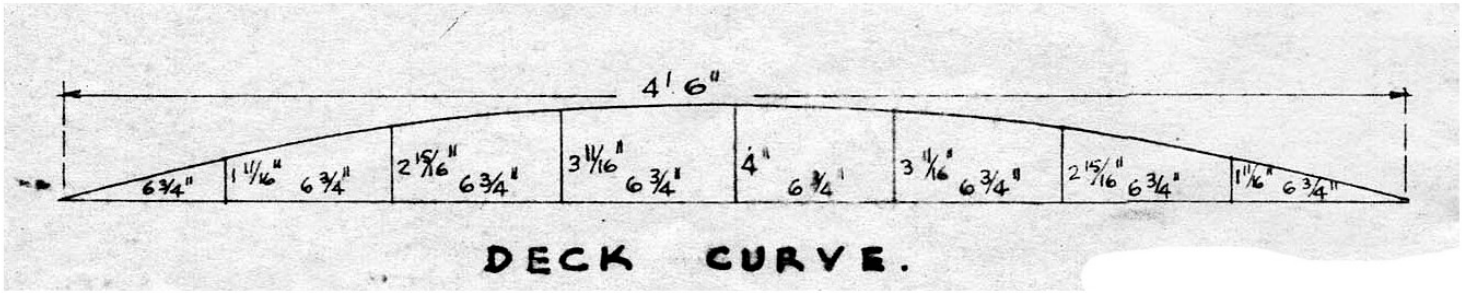

DECK CURVE.

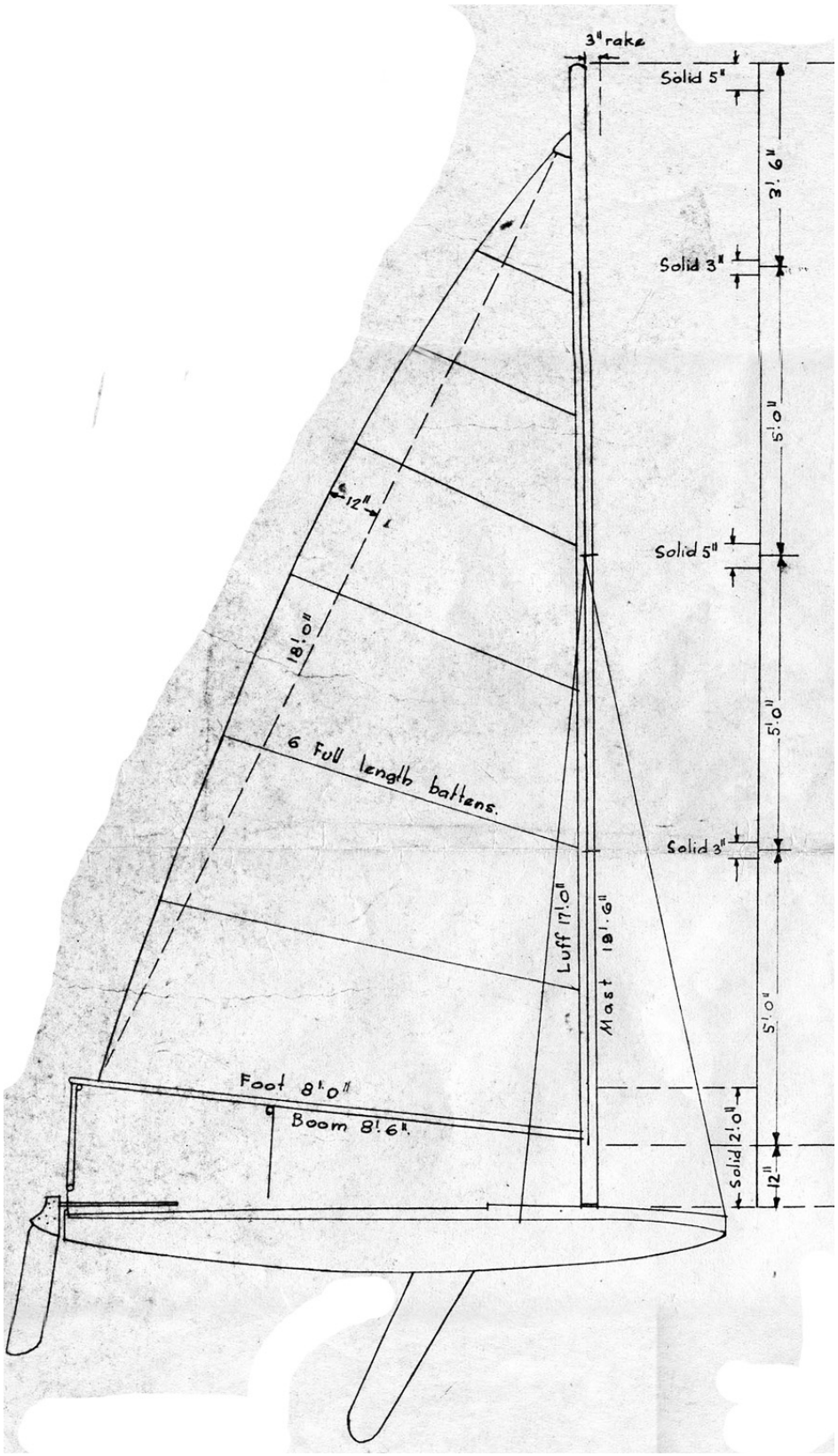
3" rake
Solid 5"
3'. 6"
Solid 3"
5'. 0"
12"
Solid 5"
18'. 0"
5'. 0"
6 Full length battens.
Solid 3"
Luff 17'. 0"
Mast 18'. 6"
5'. 0"
Foot 8'. 0"
Boom 8'. 6".
Solid 2'. 0"
12"